THIS DRAWING IS UNPUBLISHED. RELEASED FOR PUBLICATION -.- .
© COPYRIGHT - BY TYCO ELECTRONICS CORPORATION. ALL INTERNATIONAL RIGHTS RESERVED.

LOC	DIST
AD	00

REVISIONS

P	LTR	DESCRIPTION	DATE	DWN	APVD
	A1	REVISED PER ECO-08-016840	09JUL08	HMR	WM

1 ALL CORNERS OR RADII TO BE .005 MAX.

2 NATURAL KNOB: BLACK INDICATOR LINE.
BLACK KNOB: WHITE INDICATOR LINE.
GOLD KNOB: RED INDICATOR LINE.

3 SETSCREWS: 303 STAINLLESS STEEL, BLACK ANODIZED.

4 KNOB: 5056 ALUMINUM ALLOY, COLOR PER TABLE
ANODIZED

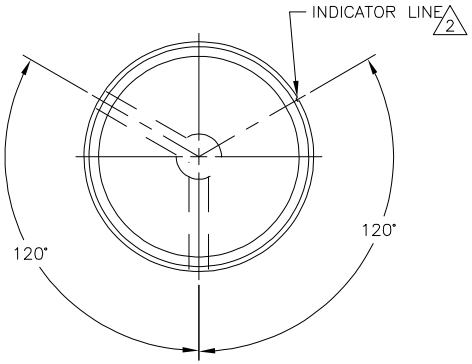

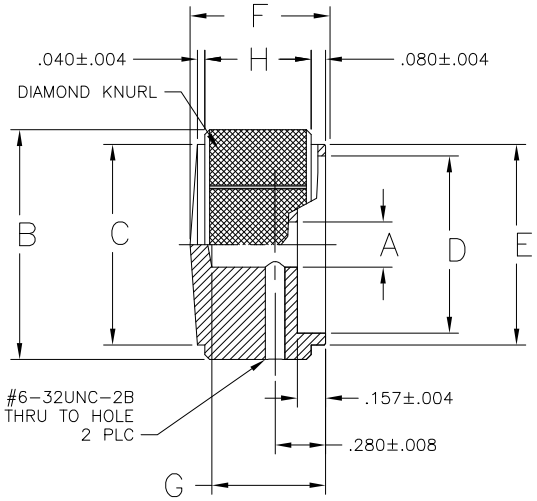

H	G	F	E	D	C	B	A SHAFT SIZE	SETSCREW	COLOR	ALCO MODEL NUMBER	TE PART NUMBER
.590±.008	.630±.008	.750±.012	1.110±.012	.980±.012	1.110±.012	1.272±.012	$.251^{+.003}_{-.000}$	#6-32 X .438	GOLD	KD1250G-1/4	-
									BLACK	KD1250B-1/4	6-1437621-9
									NATURAL	KD1250A-1/4	6-1437621-8
.470±.008	.510±.008	.630±.008	.820±.012	.710±.012	.820±.012	.970±.012		#6-32 X .313	GOLD	KD900G-1/4	-
									BLACK	KD900B-1/4	7-1437621-7
									NATURAL	KD900A-1/4	7-1437621-6
			.660±.012	.590±.008	.660±.012	.770±.012		#6-32 X .188	GOLD	KD700G-1/4	-
									BLACK	KD700B-1/4	7-1437621-5
									NATURAL	KD700A-1/4	7-1437621-4
			.430±.008	.380±.008	.430±.008	.520±.008		#6-32 X .125	GOLD	KD500G-1/4	-
									BLACK	KD500B-1/4	7-1437621-2
									NATURAL	KD500A-1/4	7-1437621-0
							$.126^{+.003}_{-.000}$		GOLD	KD500G-1/8	-
									BLACK	KD500B-1/8	7-1437621-3
									NATURAL	KD500A-1/8	7-1437621-1

6-1437621-8

THIS DRAWING IS A CONTROLLED DOCUMENT.

DIMENSIONS: INCHES

TOLERANCES UNLESS OTHERWISE SPECIFIED:
0 PLC ± -
1 PLC ± -
2 PLC ± -
3 PLC ± -
4 PLC ± -
ANGLES ± 2°

MATERIAL 3 4

FINISH -

DWN	M.BINNER	13JAN05
CHK	M.ZITTO	13JAN05
APVD	M.ZITTO	13JAN05
PRODUCT SPEC	—	
APPLICATION SPEC	—	
WEIGHT		

Tyco Electronics
Tyco Electronics Corporation
Harrisburg, PA 17105-3608

NAME: KNOB, KD SERIES

SIZE	CAGE CODE	DRAWING NO	RESTRICTED TO
A2	00779	C-6-1437621-8	—

CUSTOMER DRAWING | SCALE 1:1 | SHEET 1 OF 1 | REV A1

1471-9 (1/08)